## LOCATION MAP

## SOUTHEAST ALASKA

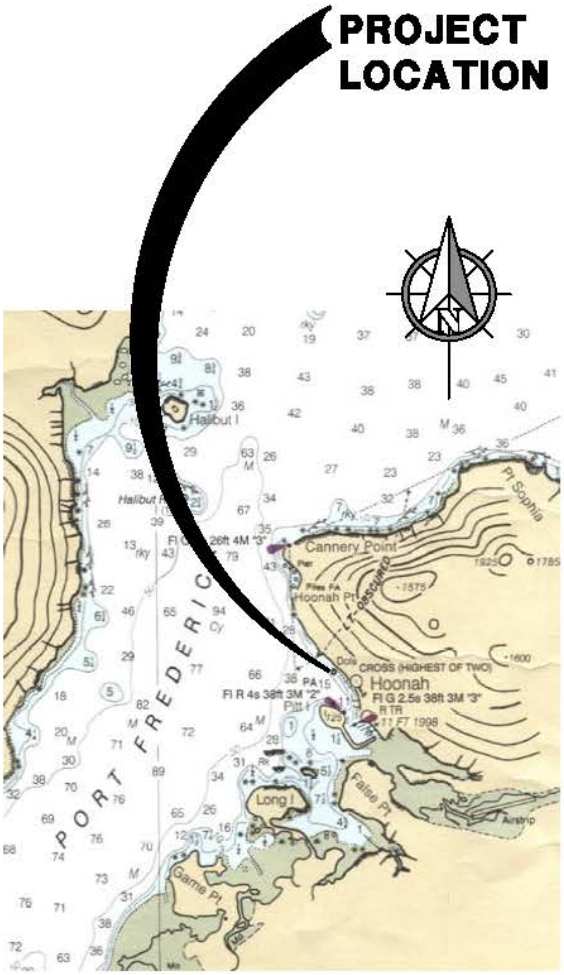


## VICINITY MAP

SCALE IN FEET

0 10,000 20,000 FT.

TO REPLACE AN EXISTING AGING FACILITY & IMPROVE ACCESSIBILITY & SAFETY AT THE CITY OF HOONAH'S INNER HARBOR BOAT LAUNCH RAMP

DATUM:
MLLW = 0.0 FT

HTL = 19.3'
MHW = 13.9'
MLLW = 0.0'

**INNER HARBOR BOAT LAUNCH RAMP REHABILITATION VICINITY MAP**

PND PROJECT NO. 122014.02

APPLICANT: CITY OF HOONAH
FILE NO.:
WATERWAY: TONGASS NARROWS
PROPOSED ACTIVITY: BOAT LAUNCH RAMP
SEC. 23 T. 75S R. 90E M COPPER RIVER
LAT.: 58°-06'N LONG.: 135°-26'W
DATE: MAY 2013



N:\12XXX\122014 Hoonah Boat Launch Rehabilitation\Permits\Drawings\1 Cover.dwg, 6/13/2013 3:38:53 PM

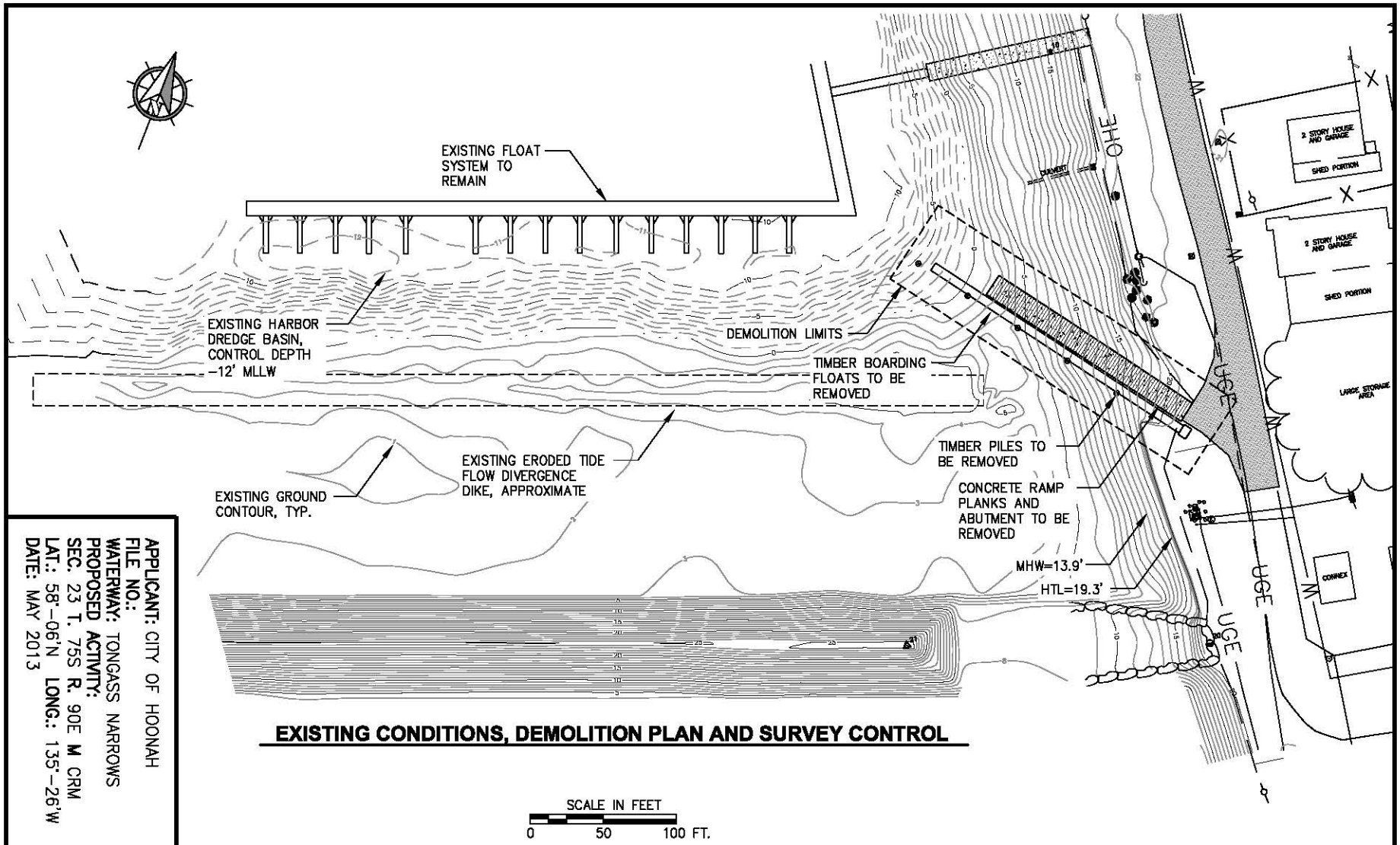


## EXISTING CONDITIONS, DEMOLITION PLAN AND SURVEY CONTROL

**APPLICANT:** CITY OF HOONAH
**FILE NO.:**
**WATERWAY:** TONGASS NARROWS
**PROPOSED ACTIVITY:**
**SEC.** 23 **T.** 75S **R.** 90E **M** CRM
**LAT.:** 58°-06'N **LONG.:** 135°-26'W
**DATE:** MAY 2013

**DATUM:**
HTL = 19.3'
MHW = 13.9'
MLLW = 0.0'

### DEMOLITION SUMMARY

1. REMOVE AND DISPOSE 6'x200' SEGMENTAL TIMBER BOARDING FLOAT IN ITS ENTIRETY INCLUDING (5) 12"ø TIMBER PILES AND ALL MISCELLANEOUS APPURTENANCES.
2. REMOVE AND DISPOSE 160 LF OF 16' WIDE CONCRETE LAUNCH RAMP PLANKS.
3. REMOVE AND DISPOSE 6'x8' CONCRETE ABUTMENT.

### TIDAL DATA

| | |
|---|---|
| EHW | 20.0' |
| HTL | 19.3' |
| MHHW | 14.8' |
| MHW | 13.9' |
| MLLW | 0.0' |

N:\12XXX\122014 Hoonah Boat Launch Rehabilitation\Permits\Drawings\2,3,5,7.dwg, 6/17/2013 3:35:40 PM

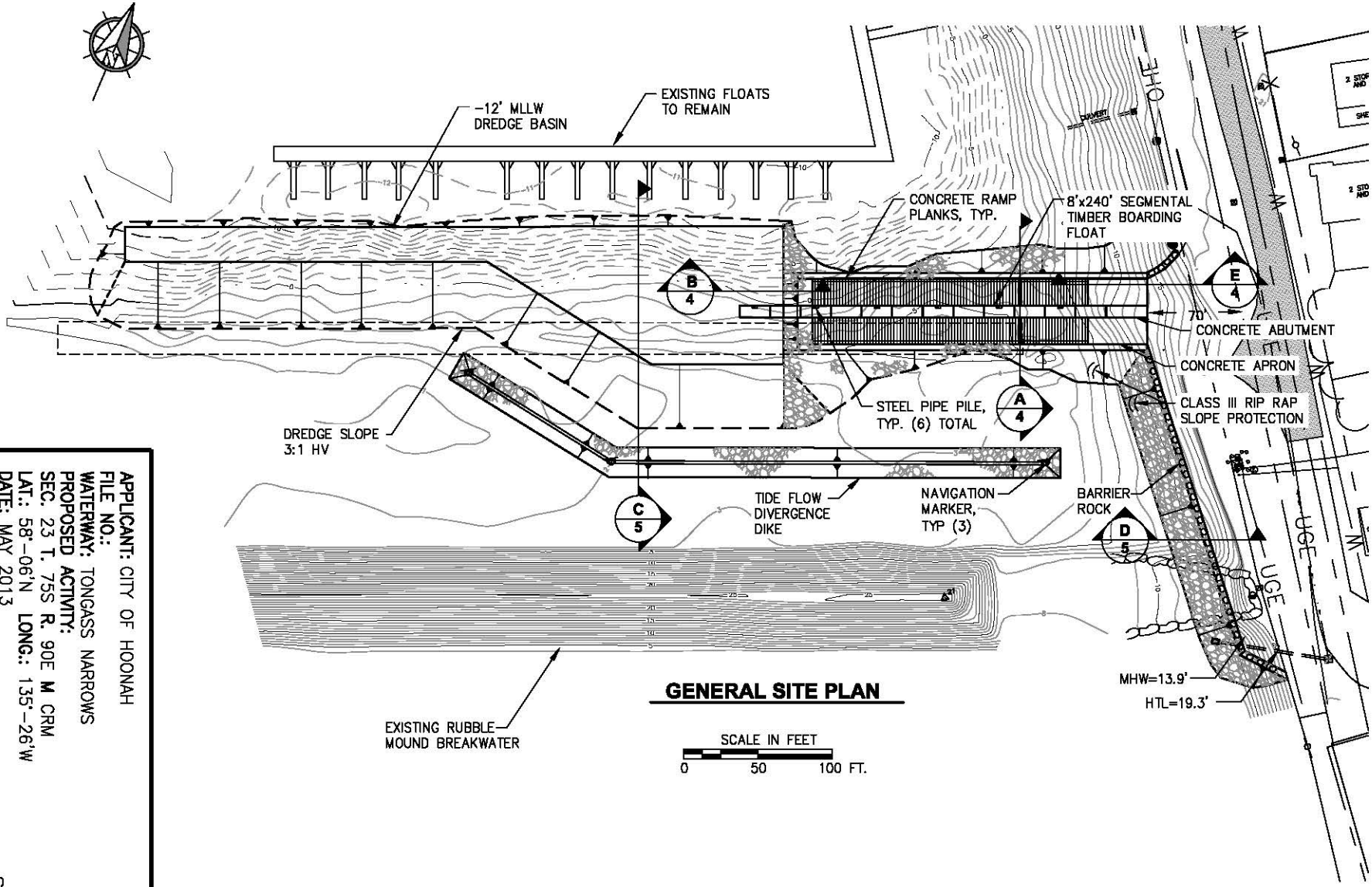


## GENERAL SITE PLAN

**APPLICANT:** CITY OF HOONAH
**FILE NO.:**
**WATERWAY:** TONGASS NARROWS
**PROPOSED ACTIVITY:**
**SEC.** 23 **T.** 75S **R.** 90E **M** CRM
**LAT.:** 58°-06'N **LONG.:** 135°-26'W
**DATE:** MAY 2013

**DATUM:**
HTL = 19.3'
MHW = 13.9'
MLLW = 0.0'

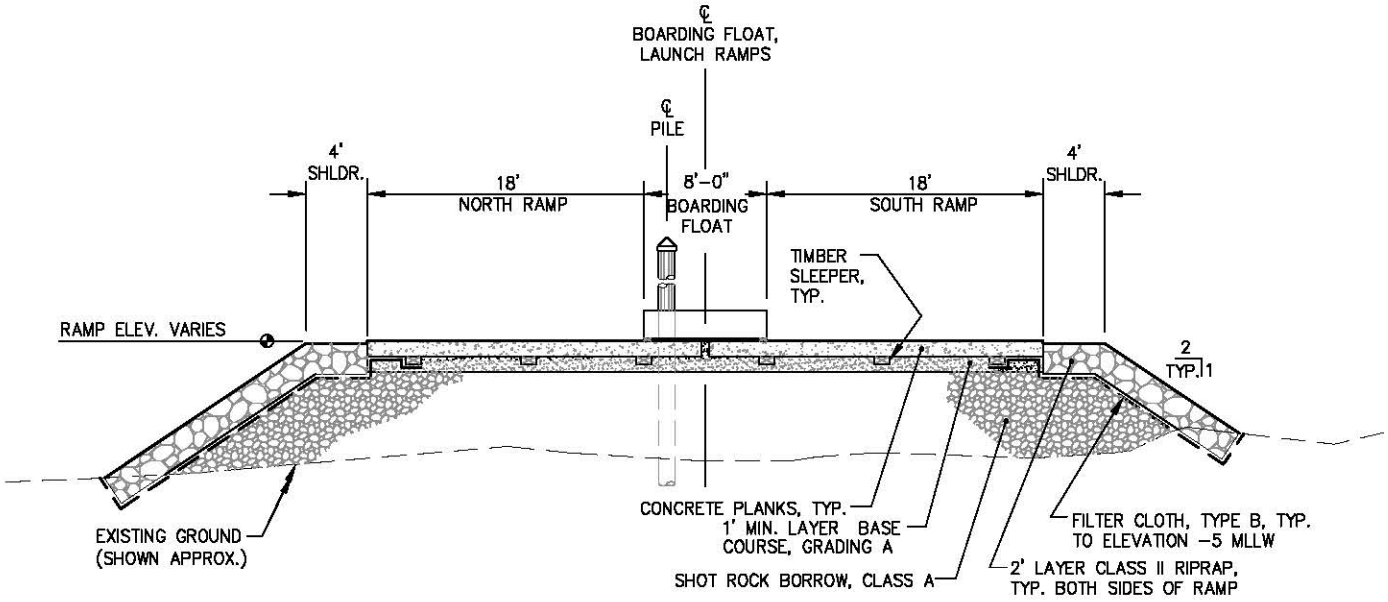


**A/3 TYPICAL SECTION BOAT LAUNCH RAMP**

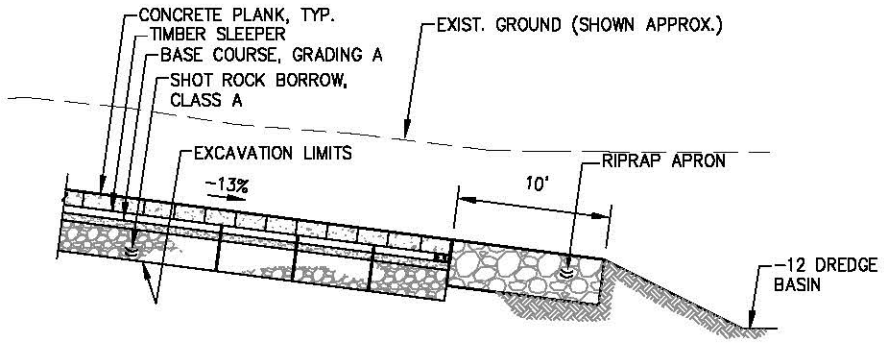


**B/3 TYPICAL SECTION RIPRAP APRON**

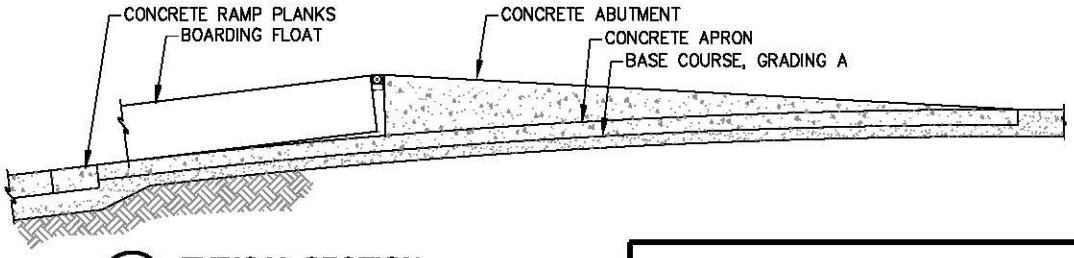


**E/3 TYPICAL SECTION CONCRETE APRON & ABUTMENT**

DATUM:

HTL = 19.3'
MHW = 13.9'
MLLW = 0.0'

**APPLICANT:** CITY OF HOONAH
**FILE NO.:**
**WATERWAY:** TONGASS NARROWS
**PROPOSED ACTIVITY:**
**SEC.** 23 **T.** 75S **R.** 90E **M** CRM
**LAT.:** 58°-06'N **LONG.:** 135°-26'W
**DATE:** MAY 2013



N:\12XXX\122014 Hoonah Boat Launch Rehabilitation\Permits\Drawings\4,6.DWG, 6/17/2013 3:37:10 PM

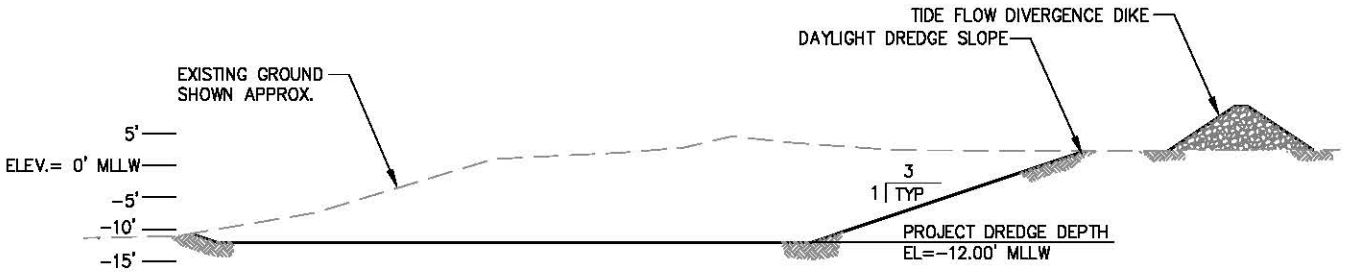


## C/3 TYPICAL DREDGE SECTION

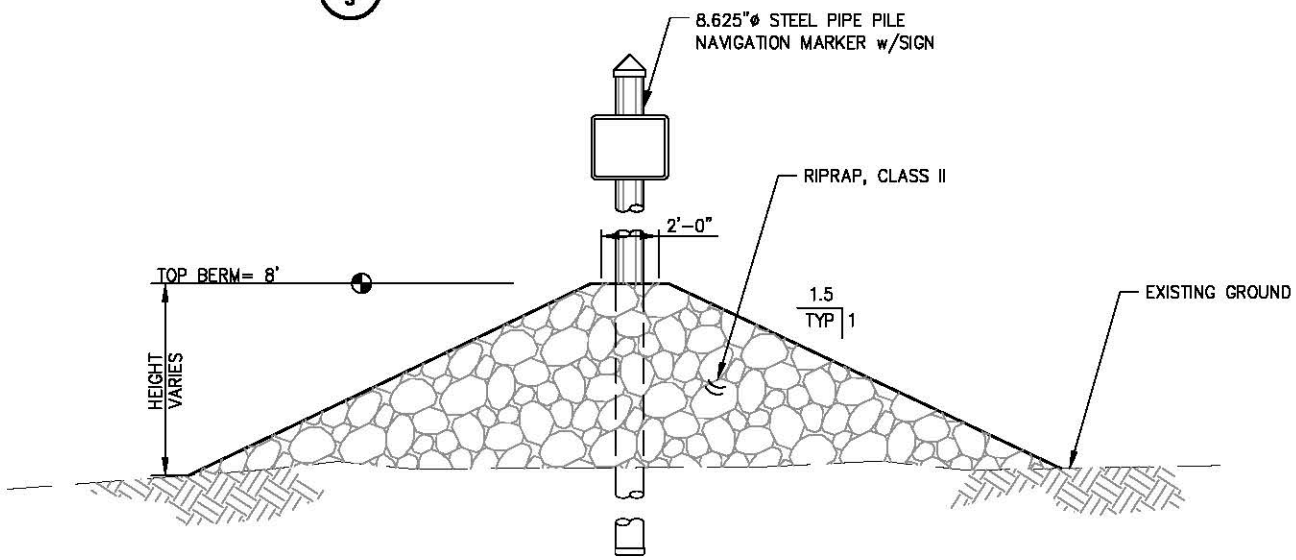


## TIDE FLOW DIVERGENCE DIKE - TYPICAL SECTION

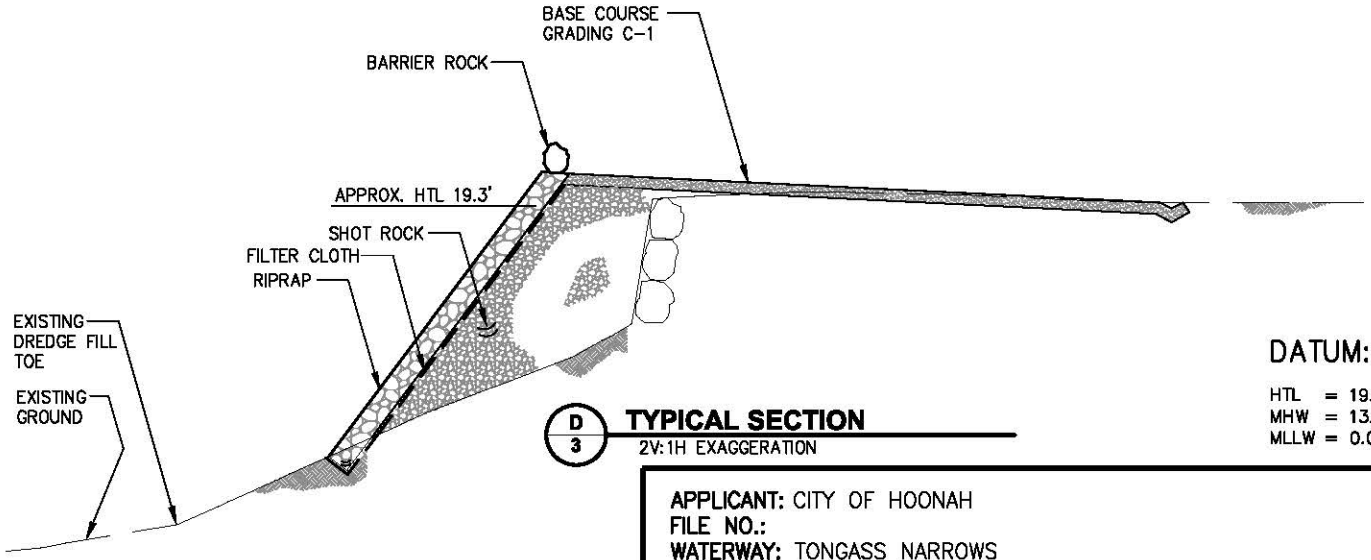


## D/3 TYPICAL SECTION

2V:1H EXAGGERATION

**DATUM:**

HTL = 19.3'
MHW = 13.9'
MLLW = 0.0'

**APPLICANT:** CITY OF HOONAH
**FILE NO.:**
**WATERWAY:** TONGASS NARROWS
**PROPOSED ACTIVITY:**
**SEC.** 23 **T.** 75S **R.** 90E **M** CRM
**LAT.:** 58°-06'N **LONG.:** 135°-26'W
**DATE:** MAY 2013



N:\12XXX\122014 Hoonah Boat Launch Rehabilitation\Permits\Drawings\2,3,5,7.dwg, 6/13/2013 4:14:22 PM

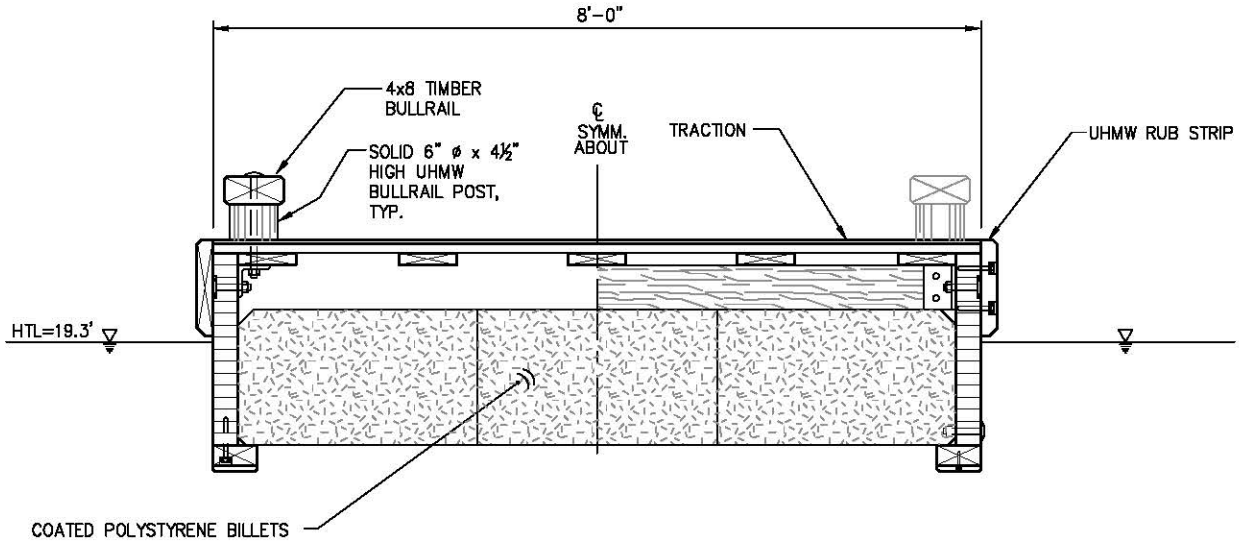


## A / - BOARDING FLOAT TYPICAL SECTION

**DATUM:**

HTL = 19.3'
MHW = 13.9'
MLLW = 0.0'

**APPLICANT:** CITY OF HOONAH
**FILE NO.:**
**WATERWAY:** TONGASS NARROWS
**PROPOSED ACTIVITY:**
**SEC.** 23 **T.** 75S **R.** 90E **M** CRM
**LAT.:** 58°-06'N **LONG.:** 135°-26'W
**DATE:** MAY 2013



N:\12XXX\122014 Hoonah Boat Launch Rehabilitation\Permits\Drawings\4,6.DWG, 6/13/2013 3:39:27 PM

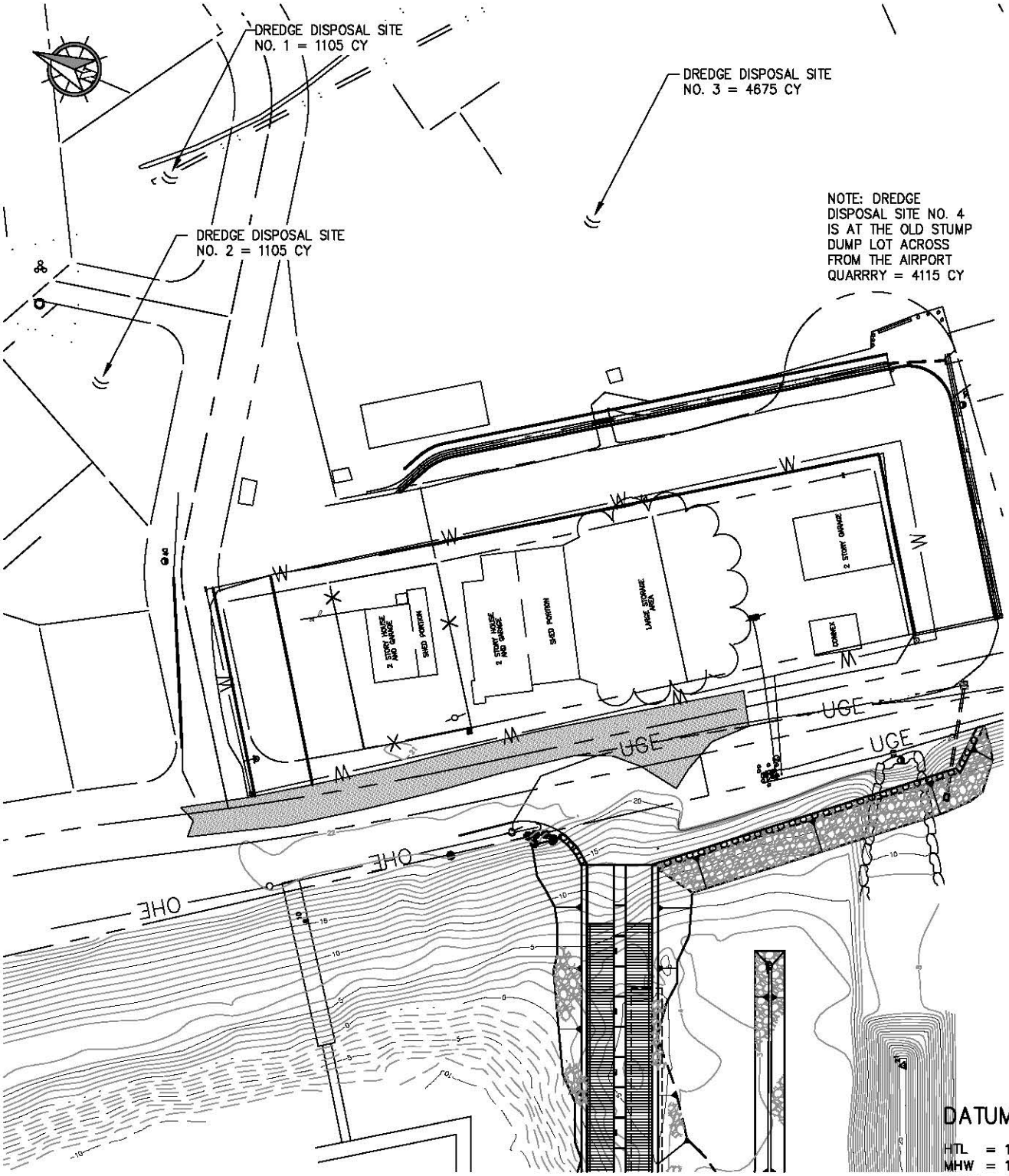


**DREDGE DISPOSAL SITES**

**APPLICANT:** CITY OF HOONAH
**FILE NO.:**
**WATERWAY:** TONGASS NARROWS
**PROPOSED ACTIVITY:**
**SEC.** 23 **T.** 75S **R.** 90E **M** CRM
**LAT.:** 58°-06'N **LONG.:** 135°-26'W
**DATE:** MAY 2013

SHEET **7** of **7**

N:\12XXX\122014 Hoonah Boat Launch Rehabilitation\Permits\Drawings\2,3,5,7.dwg, 6/13/2013 3:23:29 PM